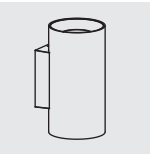

COSMOS

WALL FIXTURE DOUBLE EMISSION

LEDS C4

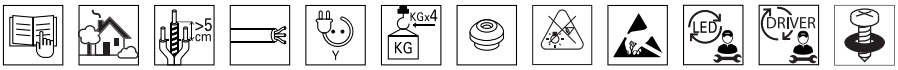

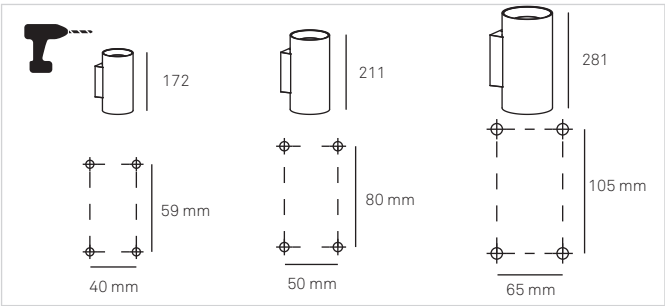

1

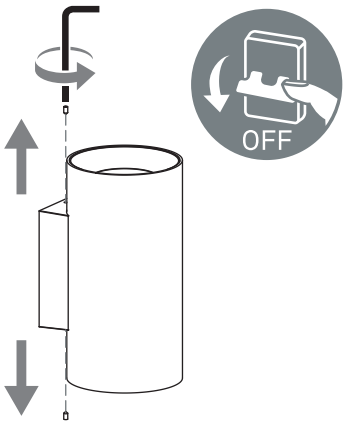

2

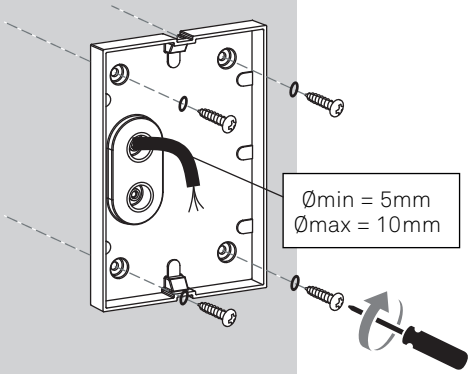

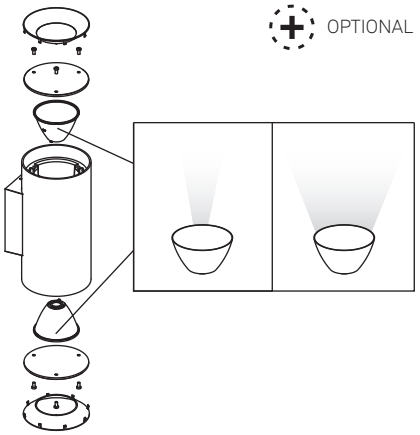

3

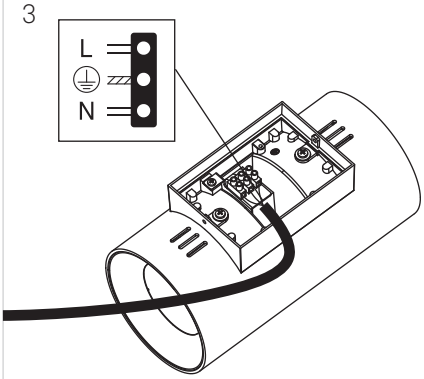

4

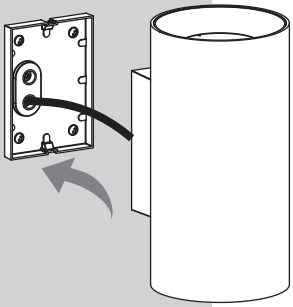

5

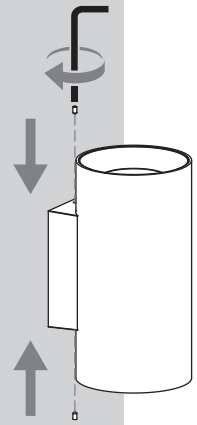

6

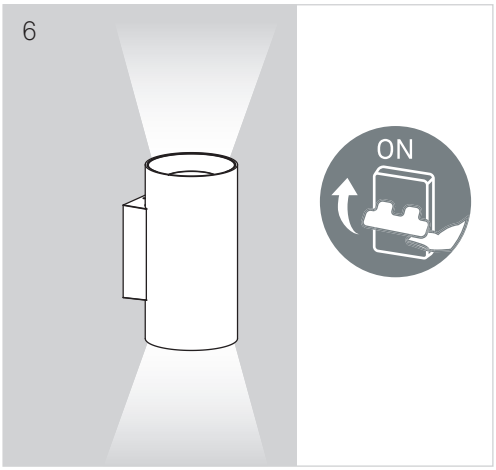

18-3-2021